Product data sheet

Specifications



Main lugs unit, EZ Meter-Pak, 800A, 120/240VAC, 1ph/3W, 800A bus, OH/UG, Type 3R

EZM1800TB

Product availability: Stock - Normally stocked in distribution facility

Main

Range of Product	EZ meter-pak
Product or Component Type	Meter center main unit
Main type	Main Lugs
Included Items	Closing plate

Complementary

Main rated current	800 A
Bus rated current	800 A
Enclosure Material	Painted steel
[Ue] rated operational voltage	120/240 V AC
Device mounting	Surface
Number of Phases	1 phase in 1 phase out
Service feed location	OH UG
Electrical connection	Lugs 1 AWG 6...300 kcmil aluminium/copper) ground Lugs 4 AWG 3/0...500 kcmil aluminium/copper) line Lugs 4 AWG 3/0...500 kcmil aluminium/copper) neutral
Wiring configuration	3-wire
Height	53.97 in (1370.84 mm)
Width	18.66 in (473.96 mm)
Depth	11.50 in (292.10 mm)

Environment

Product Certifications	UL Listed
Enclosure Rating	NEMA 3R

Ordering and shipping details

Category	US10DE400020
Discount Schedule	0DE4
GTIN	785901304869
Returnability	Yes
Country of origin	MX

Price is “List Price” and may be subject to a trade discount – check with your local distributor or retailer for actual price.

Disclaimer: This documentation is not intended as a substitute for and is not to be used for determining suitability or reliability of these products for specific user applications

Packing Units

Unit Type of Package 1	PCE
Nbr. of units in pkg.	1
Package 1 Height	14.400 in (36.576 cm)
Package 1 Width	22.800 in (57.912 cm)
Package 1 Length	54.700 in (138.938 cm)
Package weight(Lbs)	84.0006 lb(US) (38.102 kg)

Contractual warranty

Warranty (in months)	18

Environmental Data

Schneider Electric aims to achieve Net Zero status by 2050 through supply chain partnerships, lower impact materials, and circularity via our ongoing “Use Better, Use Longer, Use Again” campaign to extend product lifetimes and recyclability.

Environmental Data explained >

How we assess product sustainability >

Environmental footprint

Total lifecycle Carbon footprint	**22 965 kg CO2 eq.**
Carbon footprint of the manufacturing phase [A1 to A3]	**369 kg CO2 eq.**
Carbon footprint of the distribution phase [A4]	**7 kg CO2 eq.**
Carbon footprint of the installation phase [A5]	**3 kg CO2 eq.**
Carbon footprint of the use phase [B2, B3, B4, B6]	**22 530 kg CO2 eq.**
Carbon footprint of the end-of-life phase [C1 to C4]	**56 kg CO2 eq.**
Environmental Disclosure	Product Environmental Profile

Use Better

Materials and Substances

Packaging made with recycled cardboard	**No**
Packaging without single use plastic	**No**
EU RoHS Directive	Compliant By Exemption
REACh Regulation	Reference contains Substances of Very High Concern above the threshold
California proposition 65	**WARNING: This product can expose you to chemicals including: Lead and lead compounds, which is known to the State of California to cause cancer and birth defects or other reproductive harm. For more information go to www.P65Warnings.ca.gov**
PVC free	**No**

Use Longer

Lifetime extension

Repair	**No**

Use Again

Repack and remanufacture

Recyclability potential, in %	**95**
Circularity Profile	**No need of specific recycling operations**
Take-back	**No**

Technical Illustration

Dimensions

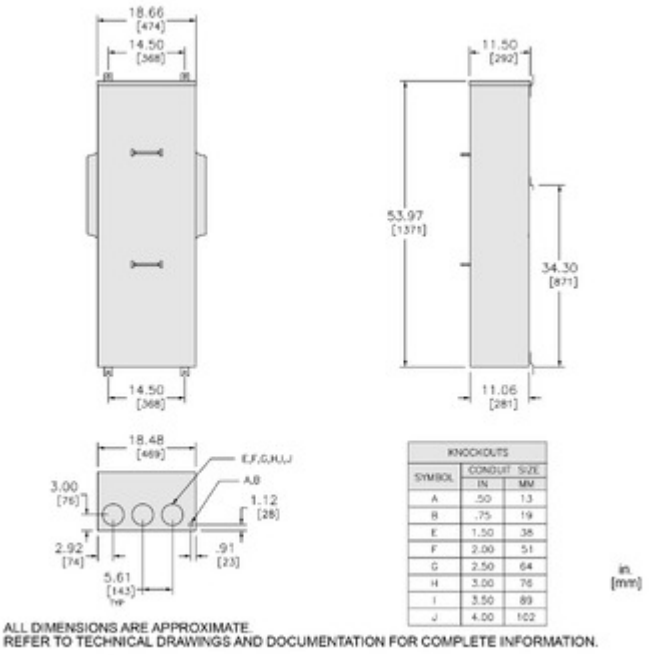

Technical Illustration

Wiring diagram

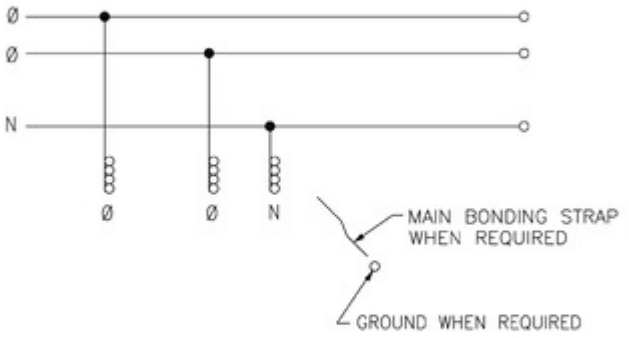

REFER TO TECHNICAL DRAWINGS AND DOCUMENTATION FOR COMPLETE INFORMATION.